Model	Color	Voltage	Power
OPT-RIE50-R	Red	24V	0.9W
OPT-RIE50-W	White	24V	0.9W
OPT-RIE50-B	Blue	24V	0.9W
OPT-RIE50-G	Green	24V	0.9W

JST SMR-02V-B, 2 Pin
or Compactible Connector

Pin	Polarity	Wire Color
1	+	Red
2	-	Black

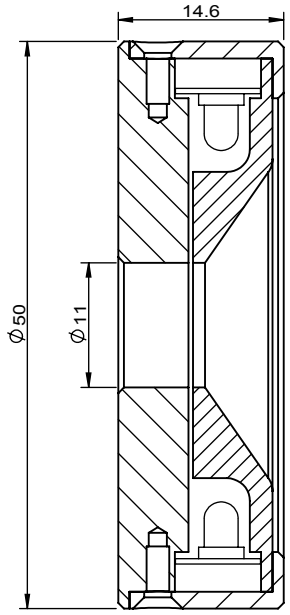

Sectional View
A-A

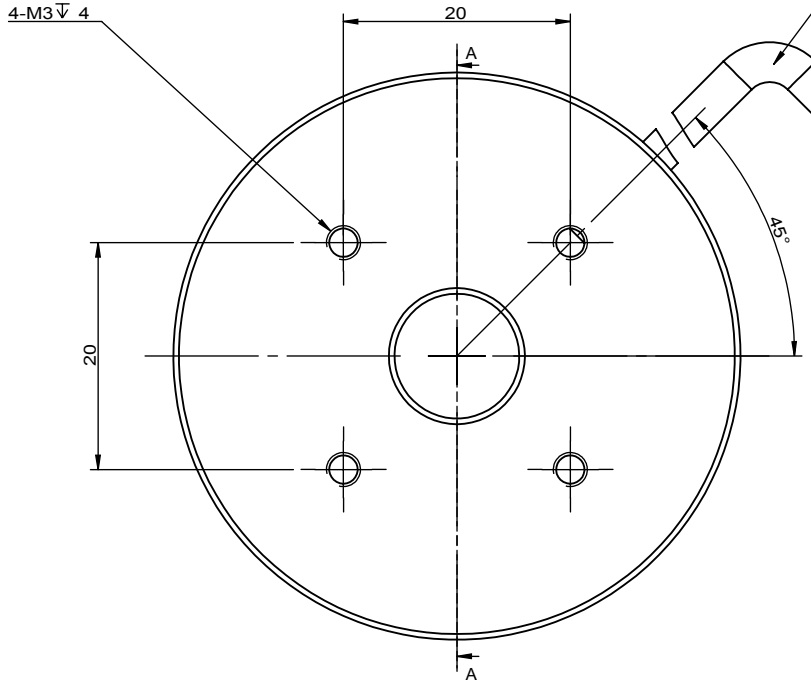

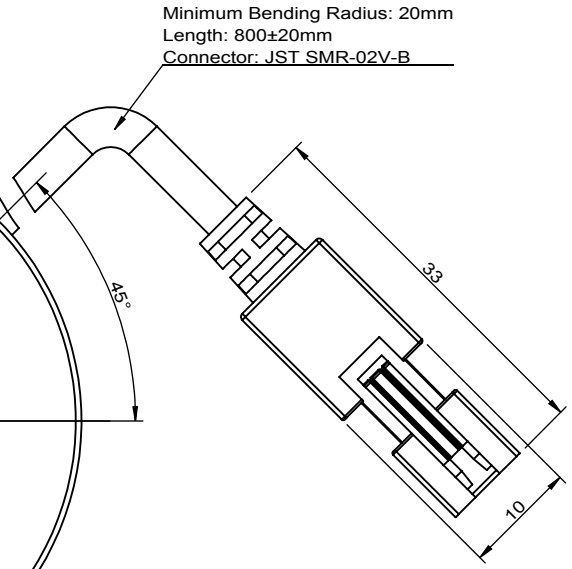

View Angle	Remark	Item	Signature	Date
		Drawing		
Standard Difference	Advised Controller: OPT-AP1024F OPT-DPA2024E	Design		
		Check		
		Approve		
IT14		Paper Size	A4	
		Revised Date	2019-04-04	

OPT® Machine Vision OPT MACHINE VISION

OPT-RIE50-X

Scale	1.5:1	Page	1/1 Total Page	Version	V2.0.1

Copyright © 2011 by OPT
All Rights Reserved

Drawing Code	KFBZ20190121KF0701