Model	Color	Voltage	Power
OPT-RI9215-R	Red	24V	2.1W
OPT-RI9215-W	White	24V	4.7W
OPT-RI9215-B	Blue	24V	4.7W
OPT-RI9215-G	Green	24V	4.7W

JST SMR-02V-B, 2 Pin
or Compactible Connector

Pin	Polarity	Wire Color
1	+	Red
2	-	Black

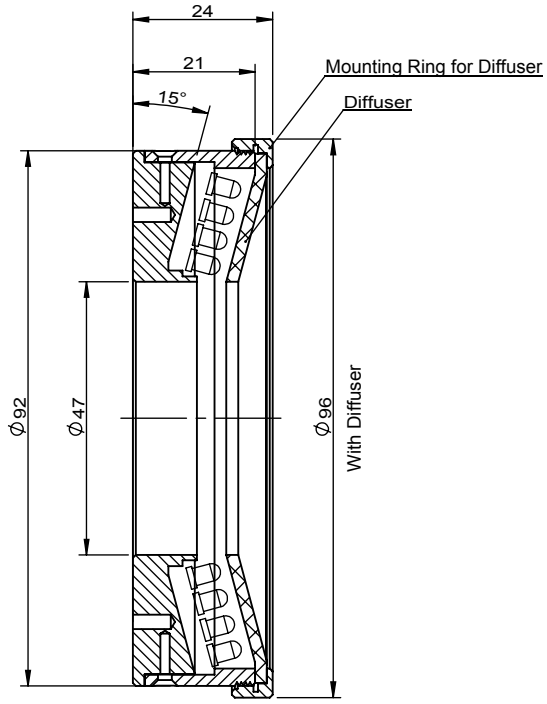

Sectional View
A-A

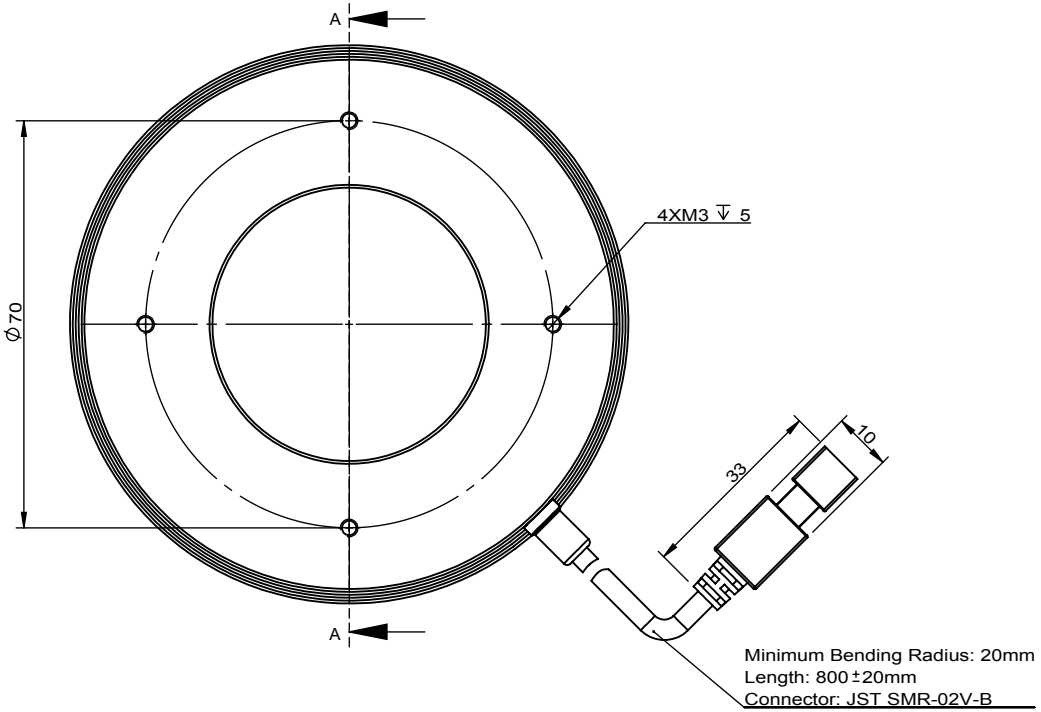

View Angle	Remark	Item	Signature	Date
		Drawing		
Standard Difference	1. Accessory: Diffuser ; Mounting Ring for Diffuser 2. Advised Controller: OPT-AP1024F OPT-DPA2024E	Design		
		Check		
		Approve		
IT14		Paper Size	A4	
		Revised Date	2019/1/26	

OPT® Machine Vision OPT MACHINE VISION

OPT-RI9215-X

Scale	1:1.5	Page	1/1 Total Page	Version	V3.0

Copyright © 2011 by OPT
All Rights Reserved

Drawing Code	KFBZ20190121KF0701