Model	Colour	Voltage	Power
OPT-RI6215-RGB	Red	24V	0.6W
OPT-RI6215-RGB	Green	24V	1.1W
OPT-RI6215-RGB	Blue	24V	1.1W

JST SMR-02V-B, 2 Pin(Male) or Compactible Connector

Pin	Polarity	Wire Colour
1	+	Red
2	-	Black

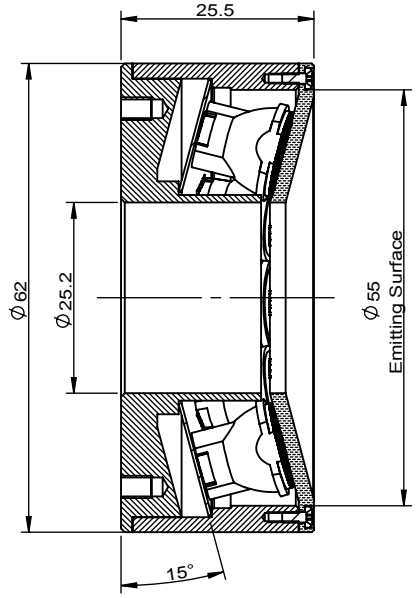

Sectional View A-A

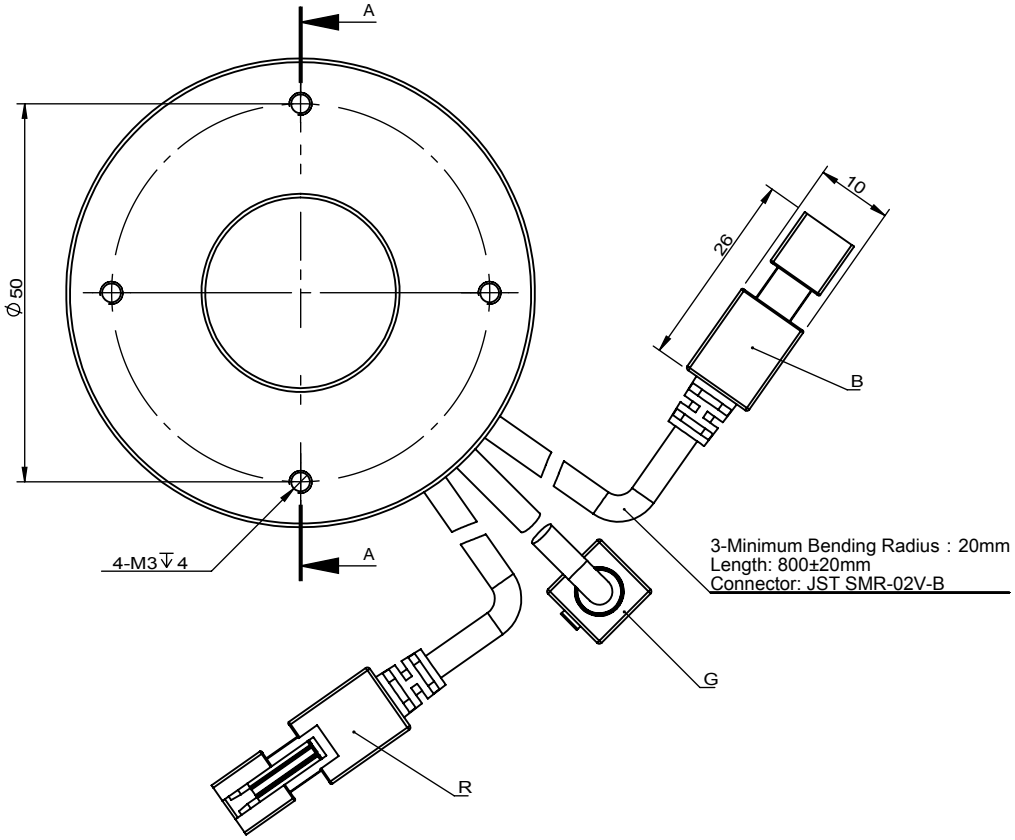

View Angle	Remark	Item	Signature	Date
		Drawing		
Standard Difference	Advised Controller: OPT-AP1024F OPT-DPA2024E	Design		
		Check		
		Approve		
IT14		Paper Size	A4	
		Design Time	2019-04-03	

OPT® Machine Vision OPT MACHINE VISION

OPT-RI6215-RGB

Rate	1:1	Page	1/1 Total Page	Version	V1.0

Copyright © 2011 by OPT
All Rights Reserved

Drawing Code	KFBZ20190403KF0801