Optical Specification		
Model		OPT-F3528-29M-V2.0
Resolution		29M Pixel
Mount		F Mount
Focal Length		35mm
Working Distance		0.18m~∞
Adjustion Type		Manual
f-stops		F2.8
F NO.		F2.8-F32
Field Angle	H=44mm	65°
	H=35mm	53.6°
	H=23mm	37°
	H=16mm	26°
	H=11mm	18°
	H=8.0mm	6.7°
Distortion		< 0.4%
Back Focal Length		27.9mm
Size		Ø62×101.2mm
Filter		M58×0.75
Working Temperature		-20°C~+60°C

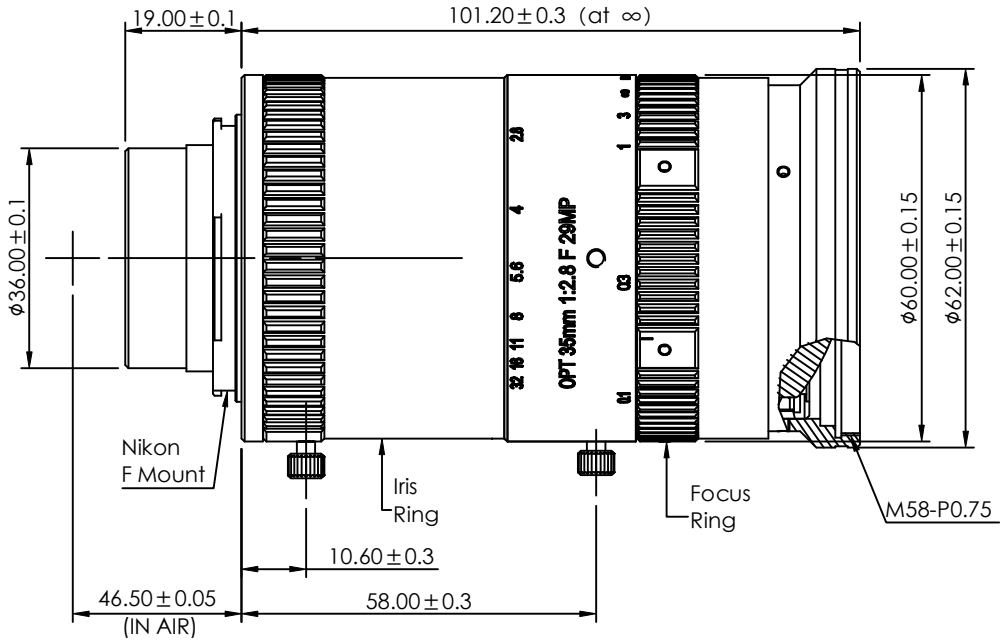

View Angle	Remark	Item	Signature	Date
		Drawing		
Standard Difference		Design		
		Check		
		Approve		
IT14		Paper Size	A4	
		Revised Date	2017-10-14	

OPT Machine Vision Co.,Ltd.

OPT-F3528-29M-V2.0

Scale	1:1	Page	1/1 Total Page	Version

Copyright © 2011 by OPT
All Rights Reserved

Drawing Code	KDBZ20171121K05023