Optical Specification							
Model				OPT-CZT0510X			
Mount				C Mount			
Sensor				13.4mm			
Telecentric				< 0.05%			
WD				106mm ± 3%			
Aperture				F8.0-F32			
Filter Size				M40xP0.5			
Magnification		0.5X			1.0x		
Distortion		< 0.05% @546nm			< 0.05% @546nm		
BFL		35.62mm			15.06mm		
Sensor Size		1/1.8"	2/3"	1/1.2"	1/1.8"	2/3"	1/1.2"
Field of view	H(mm)	14.36	17.6	21.46	7.18	8.8	10.72
	V(mm)	10.65	13.2	16.09	5.32	6.6	8.04
	D(mm)	17.88	22	26.81	8.94	11	13.4
Size				Ø40×75mm			
Working Temperature				-20°C~+60°C			

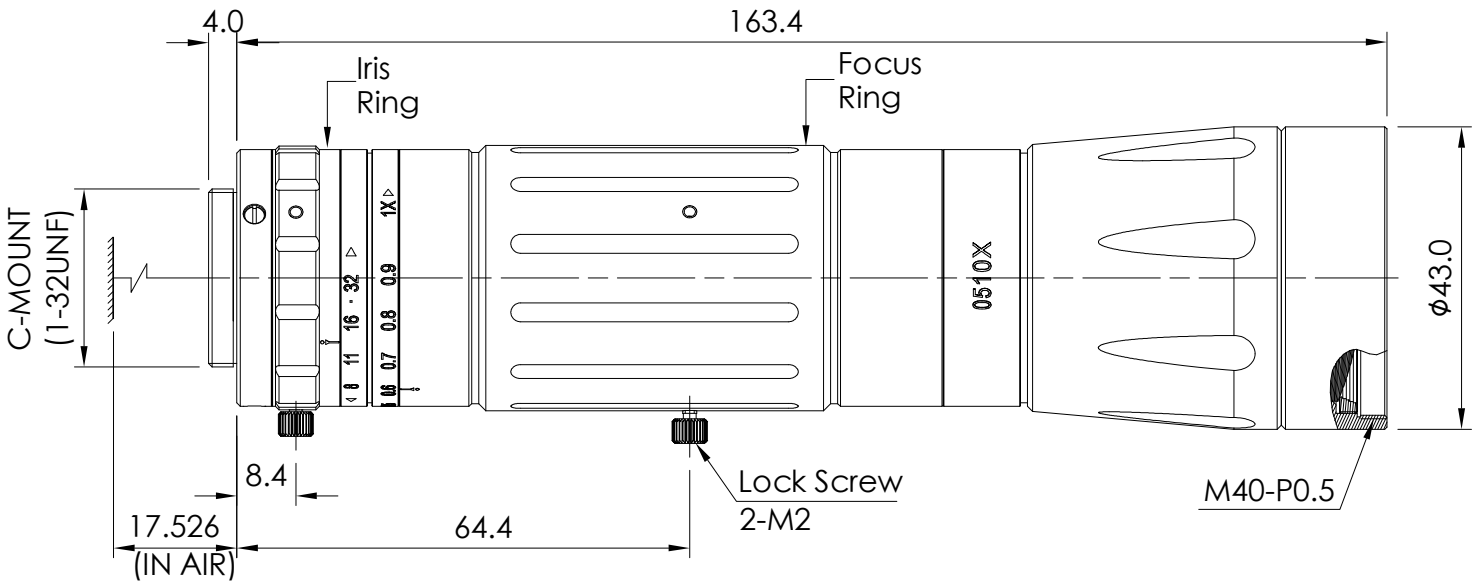

View Angle	Remark	Item	Signature	Date
		Drawing		
Standard Difference		Design		
		Check		
		Approve		
IT14		Paper Size	A4	
		Revised Date	2018-12-20	

OPT Machine Vision Co.,Ltd.

OPT-CZT0510X

Scale	1:1	Page	1/1 Total Page	Version	V1.0

Copyright © 2011 by OPT
All Rights Reserved

Drawing Code	KDBZ20181220K03001