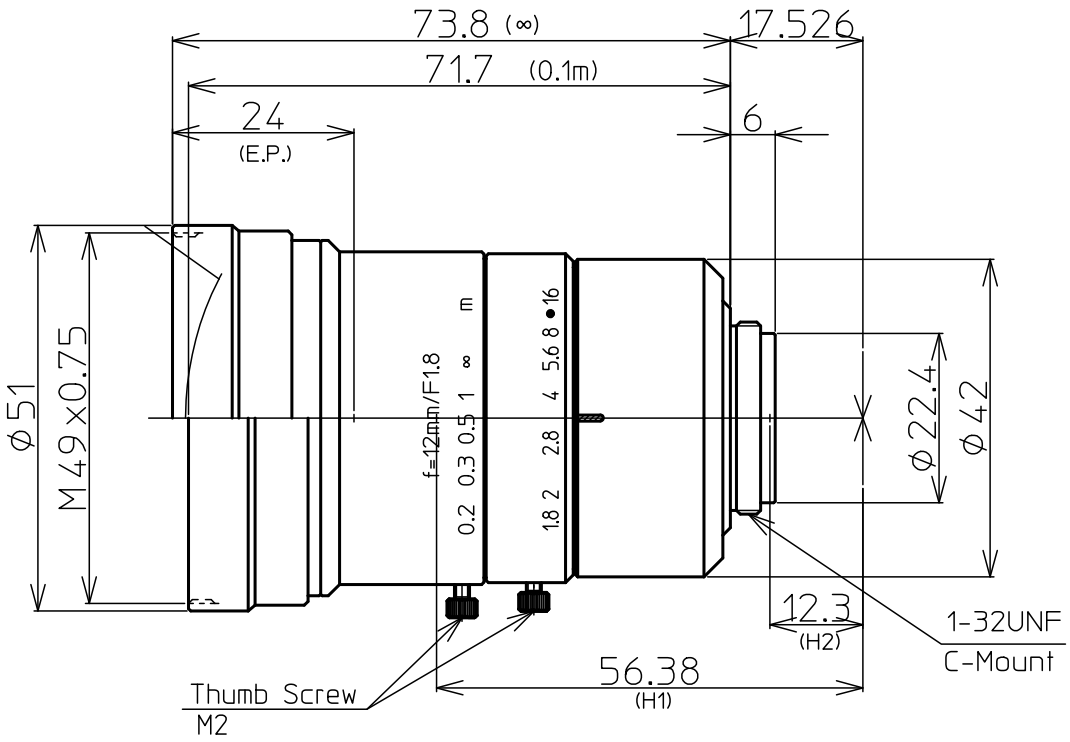

1.1" 1.8/12mm C		1.1"	1"	2/3"
FOCAL LENGTH		f=12mm		
F-NUMBER		F=1.8-16		
PICTURE SIZE		10.6x14.1mm	9.6x12.8mm	6.6x8.8mm
ANGLE OF VIEW (∞)	VER. ANGLE	46.9°	42.9°	30.1°
	HOR. ANGLE	60.0°	55.3°	39.6°
	DIA. ANGLE	71.0°	66.2°	48.5°
DISTORTION (TV)		0.26%	0.03%	-0.22%
FIELD OF VIEW (MINIMUM FOCUS DISTANCE)	VER.	101mm	92mm	63mm
	HOR.	135mm	123mm	84mm
	DIA.	168mm	153mm	105mm
MINIMUM FOCUS DISTANCE		0.1m		
FLANGE BACK		17.526mm in air		
BACK FOCUS		14.5mm in air		
FILTER SCREW SIZE		M49x0.75		
FRONT/REAR EFFECTIVE DIA.		FRONT φ36.8mm	REAR φ17.0mm	
MOUNT		C-MOUNT		
EXIT PUPIL		-118.2mm		
TEMPERATURE RANGE		-10~+50°C		
STORAGE TEMPERATURE RANGE		-20~+60°C		
RESOLUTION CENTER/CORNER		CENTER 160lp/mm	CORNER 100lp/mm	
WEIGHT		260g		

NOTE:Specifications and availability are subject to change without notice

注）本仕様については、予告なしに変更する場合があります。

		尺度 1/1	工場番号 LM12FC
		機種名 1.1" F1.8 / f12mm	
2018.11.15	フィルター径変更	機種番 LM12FC	
2018.03.26	作成年月日		