SONY

Diagonal 4.5mm (Type 1/4) CCD Image Sensor for PAL Color Video Cameras

ICX229AK

Description

The ICX229AK is an interline CCD solid-state image sensor suitable for PAL color video cameras. Compared with the current product ICX209AK, smear charactristics are improved drastically and power consumption is reduced.
High resolution is achieved through the of Ye, Cy, Mg, and G complementary color mosaic filters. High sensitivity and high saturation signal are achieved by Super HAD CCD technology.
This chip features a field period readout system and an electronic shutter with variable charge-storage time.
The package is a 10mm-square 14-pin DIP (Plastic).

Features

- ◆ Low smear (–100dB Typ. at F5.6)
- ◆ Low power consumption
  (–38% compared with ICX209AK)
- ◆ High sensitivity
  (+3dB at F1.2 compared with ICX209AK)
- ◆ High saturation signal
- ◆ Supply voltage: 12V
- ◆ Horizontal register: 3.3V drive
- ◆ Reset gate: 3.3V drive
- ◆ No voltage adjustment
  (Reset gate and substrate bias need no adjustment.)
- ◆ High resolution, low dark current
- ◆ Excellent antiblooming characteristics
- ◆ Continuous variable-speed shutter
- ◆ Recommended range of exit pupil distance: –20 to –100mm
- ◆ Ye, Cy, Mg, and G complementary color mosaic filters on chip

Package

14-pin DIP (Plastic)

Super HAD CCD™

* "Super HAD CCD" is a trademark of Sony Corporation. The "Super HAD CCD" is a version of Sony's high performance CCD HAD (Hole-Accumulation Diode) sensor with sharply improved sensitivity by the incorporation of a new semiconductor technology developed by Sony Corporation.

Sony reserves the right to change products and specifications without prior notice. This information does not convey any license by any implication or otherwise under any patents or other right. Application circuits shown, if any, are typical examples illustrating the operation of the devices. Sony cannot assume responsibility for any problems arising out of the use of these circuits.

Device Structure

- ◆ Interline CCD image sensor
- ◆ Image size : Diagonal 4.5mm (Type 1/4)
- ◆ Number of effective pixels : 752 (H) × 582 (V) approx. 440K pixels
- ◆ Total number of pixels : 795 (H) × 596 (V) approx. 470K pixels
- ◆ Chip size : 4.34mm (H) × 3.69mm (V)
- ◆ Unit cell size : 4.85μm (H) × 4.65μm (V)
- ◆ Optical black : Horizontal (H) direction: Front 3 pixels, rear 40 pixels
  Vertical (V) direction : Front 12 pixels, rear 2 pixels
- ◆ Number of dummy bits : Horizontal: 22
  Vertical : 1 (even fields only)
- ◆ Substrate material : Silicon

Optical Black Position

(Top View)

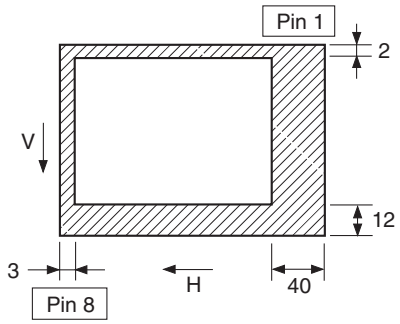

USE RESTRICTION NOTICE

This USE RESTRICTION NOTICE ("Notice") is for customers who are considering or currently using the CCD image sensor products ("Products") set forth in this specifications book. Sony Corporation ("Sony") may, at any time, modify this Notice which will be available to you in the latest specifications book for the Products. You should abide by the latest version of this Notice. If a Sony subsidiary or distributor has its own use restriction notice on the Products, such a use restriction notice will additionally apply between you and the subsidiary or distributor. You should consult a sales representative of the subsidiary or distributor of Sony on such a use restriction notice when you consider using the Products.

Use Restrictions

- ◆ The Products are intended for incorporation into such general electronic equipment as office products, communication products, measurement products, and home electronics products in accordance with the terms and conditions set forth in this specifications book and otherwise notified by Sony from time to time.
- ◆ You should not use the Products for critical applications which may pose a life- or injury- threatening risk or are highly likely to cause significant property damage in the event of failure of the Products. You should consult your Sony sales representative beforehand when you consider using the Products for such critical applications. In addition, you should not use the Products in weapon or military equipment.
- ◆ Sony disclaims and does not assume any liability and damages arising out of misuse, improper use, modification, use of the Products for the above-mentioned critical applications, weapon and military equipment, or any deviation from the requirements set forth in this specifications book.

Design for Safety

- ◆ Sony is making continuous efforts to further improve the quality and reliability of the Products; however, failure of a certain percentage of the Products is inevitable. Therefore, you should take sufficient care to ensure the safe design of your products such as component redundancy, anti-conflagration features, and features to prevent mis-operation in order to avoid accidents resulting in injury or death, fire or other social damage as a result of such failure.

Export Control

- ◆ If the Products are controlled items under the export control laws or regulations of various countries, approval may be required for the export of the Products under the said laws or regulations. You should be responsible for compliance with the said laws or regulations.

No License Implied

- ◆ The technical information shown in this specifications book is for your reference purposes only. The availability of this specifications book shall not be construed as giving any indication that Sony and its licensors will license any intellectual property rights in such information by any implication or otherwise. Sony will not assume responsibility for any problems in connection with your use of such information or for any infringement of third-party rights due to the same. It is therefore your sole legal and financial responsibility to resolve any such problems and infringement.

Governing Law

- ◆ This Notice shall be governed by and construed in accordance with the laws of Japan, without reference to principles of conflict of laws or choice of laws. All controversies and disputes arising out of or relating to this Notice shall be submitted to the exclusive jurisdiction of the Tokyo District Court in Japan as the court of first instance.

Other Applicable Terms and Conditions

- ◆ The terms and conditions in the Sony additional specifications, which will be made available to you when you order the Products, shall also be applicable to your use of the Products as well as to this specifications book. You should review those terms and conditions when you consider purchasing and/or using the Products.

Block Diagram and Pin Configuration

(Top View)

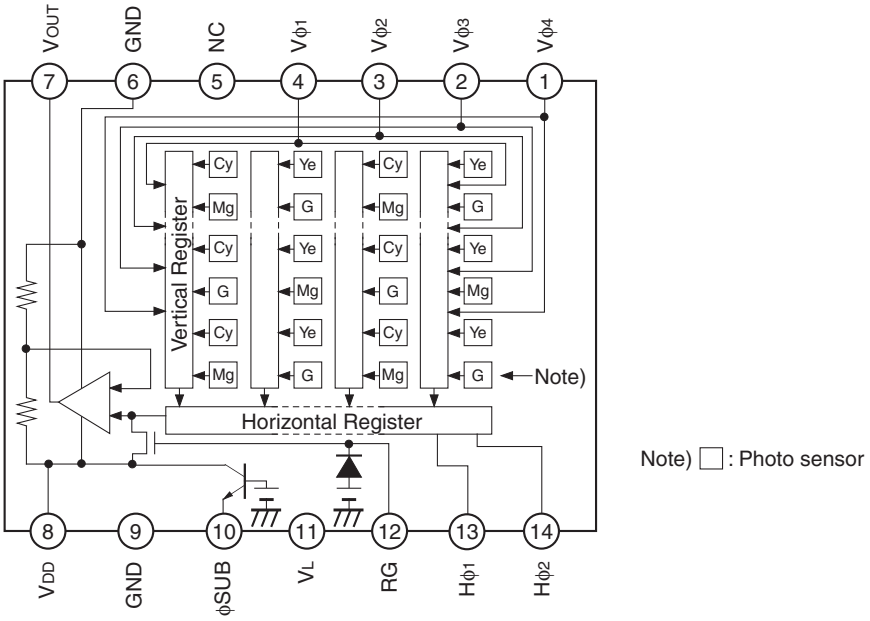

Pin Description

Pin No.	Symbol	Description	Pin No.	Symbol	Description
1	Vφ4	Vertical register transfer clock	8	VDD	Supply voltage
2	Vφ3	Vertical register transfer clock	9	GND	GND
3	Vφ2	Vertical register transfer clock	10	φSUB	Substrate clock
4	Vφ1	Vertical register transfer clock	11	VL	Protective transistor bias
5	NC		12	RG	Reset gate clock
6	GND	GND	13	Hφ1	Horizontal register transfer clock
7	VOUT	Signal output	14	Hφ2	Horizontal register transfer clock

Absolute Maximum Ratings

Item		Ratings	Unit	Remarks
Against ϕSUB	V_{DD}, V_{OUT}, RG – ϕSUB	–32 to +12	V	
	$V\phi_1$, $V\phi_3$ – ϕSUB	–40 to +15	V	
	$V\phi_2$, $V\phi_4$, V_L – ϕSUB	–40 to +0.3	V	
	$H\phi_1$, $H\phi_2$, GND – ϕSUB	–32 to +0.3	V	
Against GND	V_{DD}, V_{OUT}, RG – GND	–0.3 to +17	V	
	$V\phi_1$, $V\phi_2$, $V\phi_3$, $V\phi_4$ – GND	–7 to +14	V	
	$H\phi_1$, $H\phi_2$ – GND	–7 to +4.2	V	
Against V_L	$V\phi_1$, $V\phi_3$ – V_L	–0.3 to +21	V	
	$V\phi_2$, $V\phi_4$, $H\phi_1$, $H\phi_2$, GND – V_L	–0.3 to +12	V	
Between input clock pins	Voltage difference between vertical clock input pins	to +12	V	*1
	$H\phi_1$ – $H\phi_2$	–5 to +5	V	
	$H\phi_1$, $H\phi_2$ – $V\phi_4$	–12 to +12	V	
Storage temperature		–30 to +80	℃	
Operating temperature		–10 to +60	℃	

*1 +21V (Max.) when clock width < 10μs, clock duty factor < 0.1%.

Bias Conditions

Item	Symbol	Min.	Typ.	Max.	Unit	Remarks
Supply voltage	V_{DD}	11.64	12.0	12.36	V	
Protective transistor bias	V_L	*1				
Substrate clock	ϕSUB	*2				
Reset gate clock	ϕRG	*2				

*1 V_L setting is the V_{VL} voltage of the vertical transfer clock waveform, or the same power supply as the V_L power supply for the V driver should be used.

*2 Do not apply a DC bias to the substrate clock and reset gate clock pins, because a DC bias is generated within the CCD.

DC Characteristics

Item	Symbol	Min.	Typ.	Max.	Unit	Remarks
Supply current	I_{DD}		3.5	5.5	mA	

Clock Voltage Conditions

Item	Symbol	Min.	Typ.	Max.	Unit	Waveform diagram	Remarks
Readout clock voltage	V_{VT}	11.64	12.0	12.36	V	1	
Vertical transfer clock voltage	V_{VH1}, V_{VH2}	–0.05	0	0.05	V	2	$V_{VH} = (V_{VH1} + V_{VH2})/2$
	V_{VH3}, V_{VH4}	–0.2	0	0.05	V	2	
	V_{VL1}, V_{VL2}, V_{VL3}, V_{VL4}	–5.5	–5.0	–4.5	V	2	$V_{VL} = (V_{VL3} + V_{VL4})/2$
	$V_{\phi V}$	4.3	5.0	5.55	V	2	$V_{\phi V} = V_{VHn} - V_{VLn}$ (n = 1 to 4)
	$V_{VH3} - V_{VH}$	–0.25		0.1	V	2	
	$V_{VH4} - V_{VH}$	–0.25		0.1	V	2	
	V_{VHH}			0.3	V	2	High-level coupling
	V_{VHL}			0.3	V	2	High-level coupling
	V_{VLH}			0.3	V	2	Low-level coupling
	V_{VLL}			0.3	V	2	Low-level coupling
Horizontal transfer clock voltage	$V_{\phi H}$	3.0	3.3	3.6	V	3	
	V_{HL}	–0.05	0	0.05	V	3	
Reset gate clock voltage	$V_{\phi RG}$	3.0	3.3	3.6	V	4	Input through 0.1μF capacitance
	$V_{RGLH} - V_{RGLL}$			0.4	V	4	Low-level coupling
	$V_{RGL} - V_{RGLm}$			0.5	V	4	Low-level coupling
Substrate clock voltage	$V_{\phi SUB}$	16.14	17.0	17.86	V	5	

Clock Equivalent Circuit Constants

Item	Symbol	Min.	Typ.	Max.	Unit	Remarks
Capacitance between vertical transfer clock and GND	$C_{\phi V1}$, $C_{\phi V3}$		1200		pF	
	$C_{\phi V2}$, $C_{\phi V4}$		680		pF	
Capacitance between vertical transfer clocks	$C_{\phi V12}$, $C_{\phi V34}$		220		pF	
	$C_{\phi V23}$, $C_{\phi V41}$		150		pF	
	$C_{\phi V13}$		82		pF	
	$C_{\phi V24}$		75		pF	
Capacitance between horizontal transfer clock and GND	$C_{\phi H1}$, $C_{\phi H2}$		22		pF	
Capacitance between horizontal transfer clocks	$C_{\phi HH}$		36		pF	
Capacitance between reset gate clock and GND	$C_{\phi RG}$		5		pF	
Capacitance between substrate clock and GND	$C_{\phi SUB}$		180		pF	
Vertical transfer clock series resistor	R_1, R_2, R_3, R_4		82		Ω	
Vertical transfer clock ground resistor	R_{GND}		15		Ω	
Horizontal transfer clock series resistor	$R_{\phi H}$		12		Ω	
Reset gate clock series resistor	$R_{\phi RG}$		51		Ω	

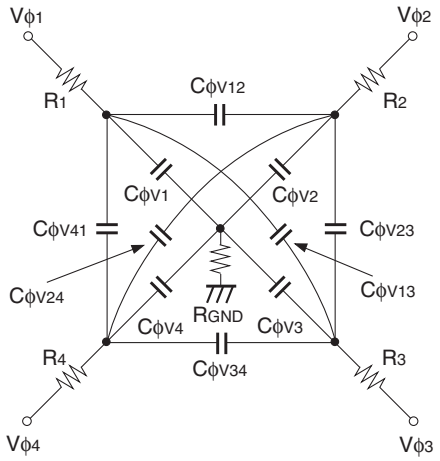

Vertical transfer clock equivalent circuit

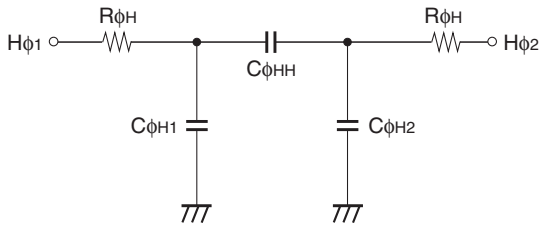

Horizontal transfer clock equivalent circuit

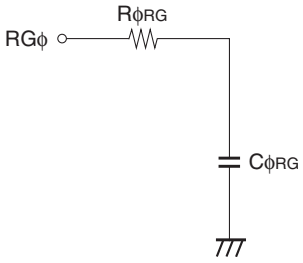

Reset gate clock equivalent circuit

Drive Clock Waveform Conditions

1. Readout clock waveform

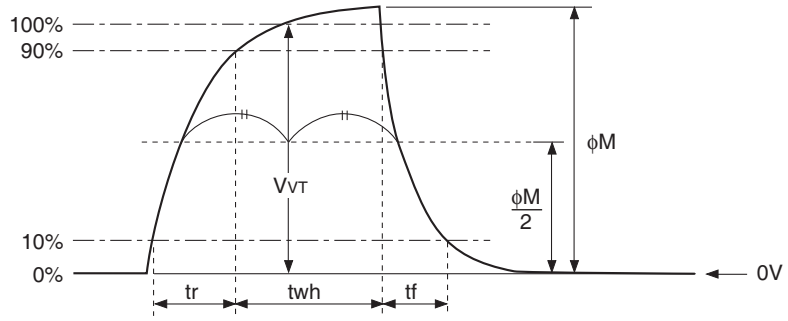

2. Vertical transfer clock waveform

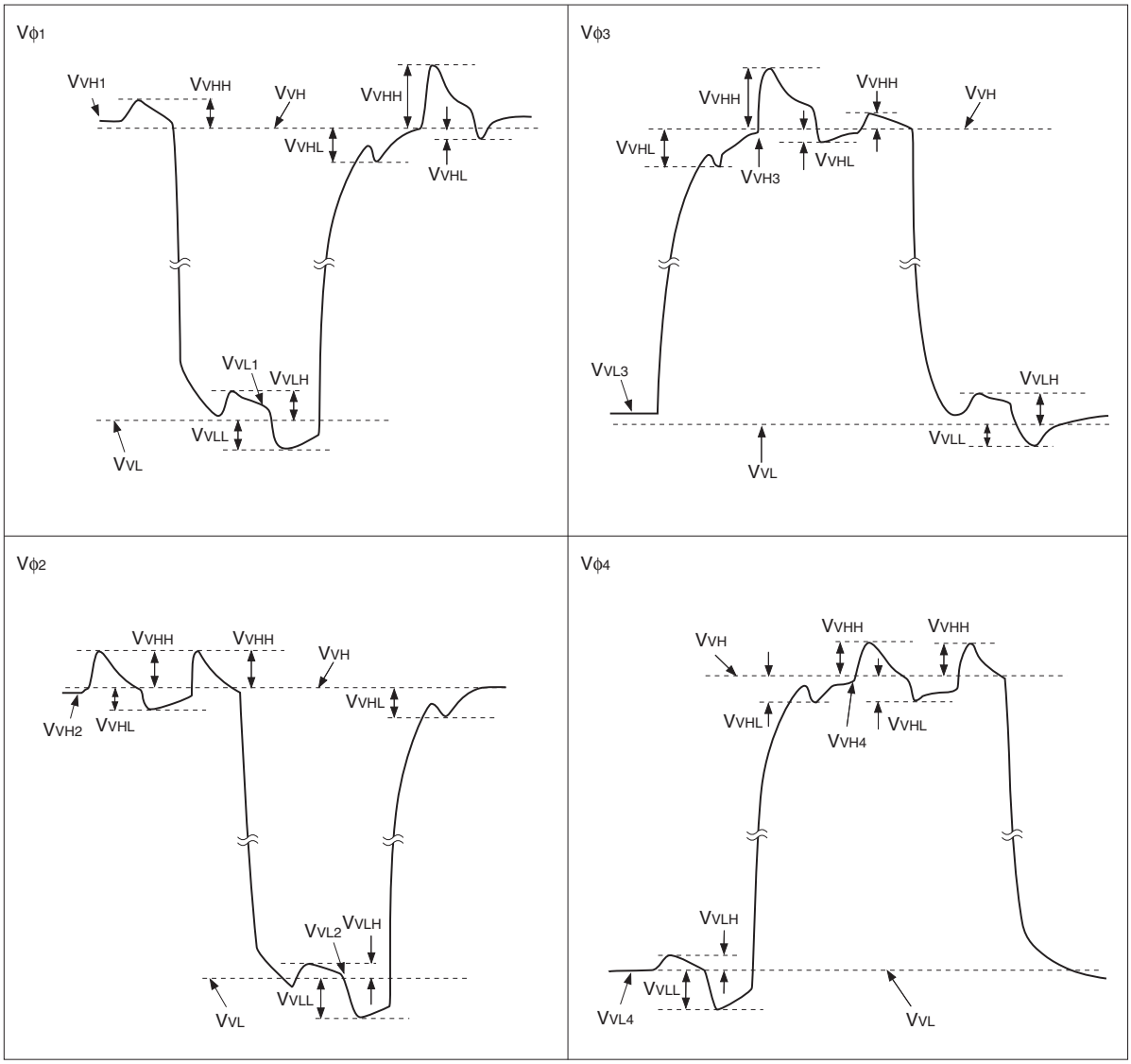

$V_{VH} = (V_{VH1} + V_{VH2})/2$
$V_{VL} = (V_{VL3} + V_{VL4})/2$
$V_{\phi V} = V_{VHn} – V_{VLn}$ (n = 1 to 4)

3. Horizontal transfer clock waveform

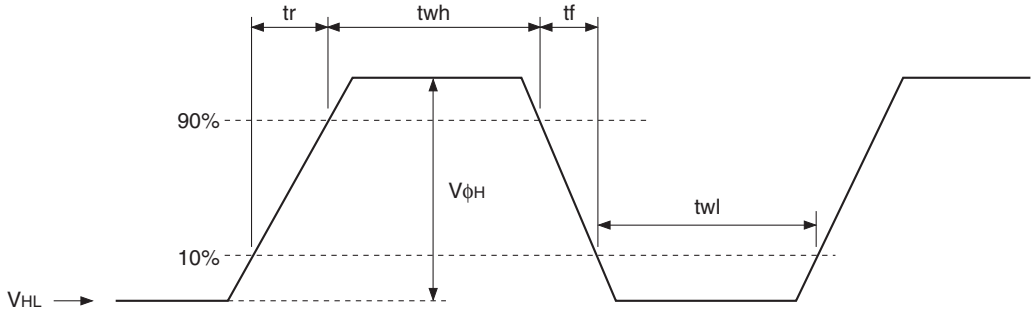

4. Reset gate clock waveform

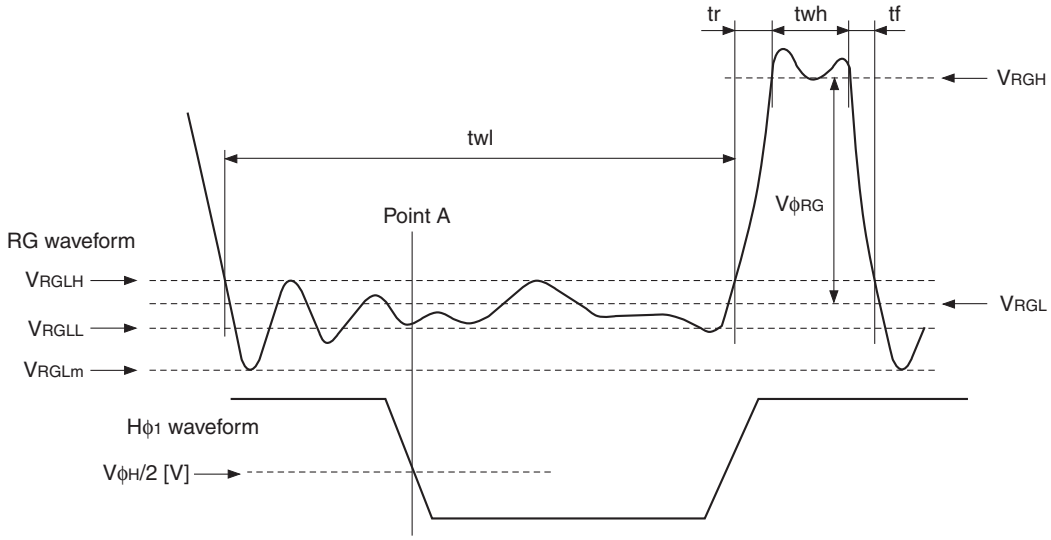

V_{RGLH} is the maximum value and V_{RGLL} is the minimum value of the coupling waveform during the period from Point A in the above diagram until the rising edge of RG.
In addition, V_{RGL} is the average value of V_{RGLH} and V_{RGLL}.

$V_{RGL} = (V_{RGLH} + V_{RGLL})/2$

Assuming V_{RGH} is the minimum value during the interval twh, then:

$V_{\phi RG} = V_{RGH} - V_{RGL}$

Negative overshoot level during the falling edge of RG is V_{RGLm}.

5. Substrate clock waveform

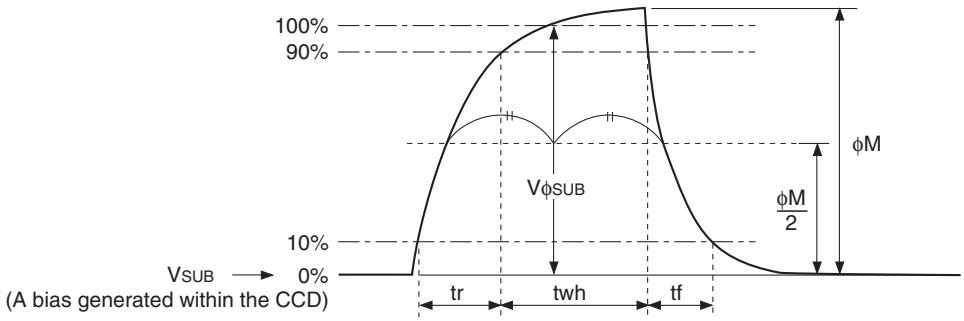

Clock Switching Characteristics

Item		Symbol	twh			twl			tr			tf			Unit	Remarks
			Min.	Typ.	Max.	Min.	Typ.	Max.	Min.	Typ.	Max.	Min.	Typ.	Max.		
Readout clock		V_T	2.3	2.5						0.5			0.5		μs	During readout
Vertical transfer clock		$V\phi_1$, $V\phi_2$, $V\phi_3$, $V\phi_4$										15		250	ns	*1
Horizontal transfer clock	During imaging	$H\phi_1$	26	28.5		26	28.5			6.5	9.5		6.5	9.5	ns	*2
		$H\phi_2$	26	28.5		26	28.5			6.5	9.5		6.5	9.5		
	During parallel-serial conversion	$H\phi_1$		5.38						0.01			0.01		μs	
		$H\phi_2$					5.38			0.01			0.01			
Reset gate clock		ϕRG	11	13			51			3			3		ns	
Substrate clock		ϕSUB	1.5	1.8							0.5			0.5	μs	When draining charge

*1 When vertical transfer clock driver CXD1267AN is used.

*2 When $V\phi_H$ = 3.0V. tf ≥ tr – 2ns, and the cross-point voltage (V_{CR}) for the $H\phi_1$ rising side of the $H\phi_1$ and $H\phi_2$ waveforms must be at least $V\phi_H/2$ [V].

Item	Symbol	two			Unit	Remarks
		Min.	Typ.	Max.		
Horizontal transfer clock	$H\phi_1$, $H\phi_2$	22	26		ns	*1

*1 The overlap period for twh and twl of horizontal transfer clocks $H\phi_1$ and $H\phi_2$ is two.

Image Sensor Characteristics

(Ta = 25℃)

Item	Symbol	Min.	Typ.	Max.	Unit	Measurement method	Remarks
Sensitivity	S	350	440		mV	1	
Sensitivity ratio	R_{MgG}	0.93		1.35		2	
	R_{YeCy}	1.15		1.48		2	
Saturation signal	Ysat	720			mV	3	Ta = 60℃
Smear	Sm		–100	–90	dB	4	
Video signal shading	SHy			20	%	5	Zone 0 and zone I
				25	%	5	Zone 0, zone I, zone II and zone II'
Uniformity between video signal channels	ΔSr			10	%	6	
	ΔSb			10	%	6	
Dark signal	Ydt			2	mV	7	Ta = 60℃
Dark signal shading	ΔYdt			1	mV	8	Ta = 60℃
Flicker Y	Fy			2	%	9	
Flicker R – Y	Fcr			5	%	9	
Flicker B – Y	Fcb			5	%	9	
Line crawl R	Lcr			3	%	10	
Line crawl G	Lcg			3	%	10	
Line crawl B	Lcb			3	%	10	
Line crawl W	Lcw			3	%	10	
Lag	Lag			0.5	%	11	

Zone Definition of Video Signal Shading

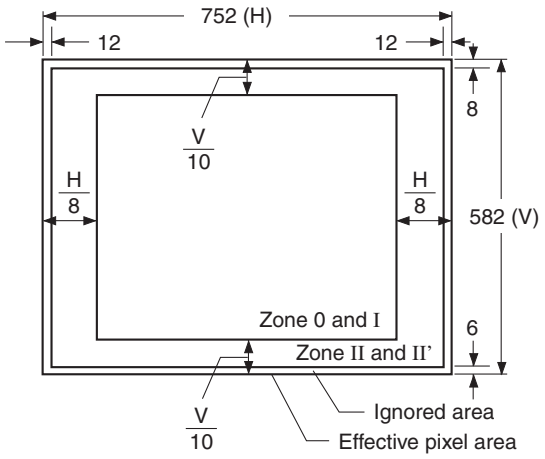

Measurement System

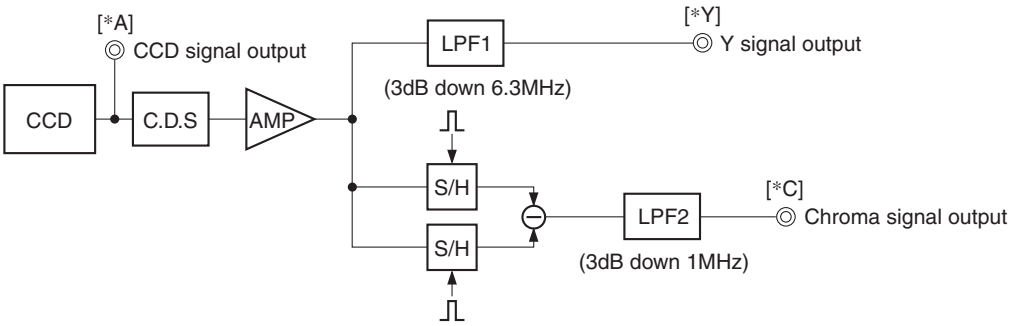

Note) Adjust the amplifier gain so that the gain between [*A] and [*Y], and between [*A] and [*C] equals 1.

Image Sensor Characteristics Measurement Method

Measurement conditions

1. In the following measurements, the device drive conditions are at the typical values of the bias and clock voltage conditions.
2. In the following measurements, spot pixels are excluded and, unless otherwise specified, the optical black level (OB) is used as the reference for the signal output, which is taken as the value of Y signal output or chroma signal output of the measurement system.

Color coding of this image sensor & Composition of luminance (Y) and chroma (color difference) signals

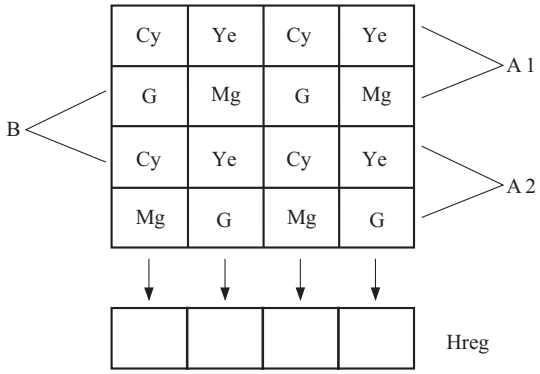

Color Coding Diagram

As shown in the left figure, fields are read out. The charge is mixed by pairs such as A1 and A2 in the A field. (pairs such as B in the B field)
As a result, the sequence of charges output as signals from the horizontal shift register (Hreg) is, for line A1, (G + Cy), (Mg + Ye), (G + Cy), and (Mg + Ye).

These signals are processed to form the Y signal and chroma (color difference) signal. The Y signal is formed by adding adjacent signals, and the chroma signal is formed by subtracting adjacent signals. In other words, the approximation:

$$Y = \{(G + Cy) + (Mg + Ye)\} \times 1/2$$
$$= 1/2\ \{2B + 3G + 2R\}$$

is used for the Y signal, and the approximation:

$$R - Y = \{(Mg + Ye) - (G + Cy)\}$$
$$= \{2R - G\}$$

is used for the chroma (color difference) signal. For line A2, the signals output from Hreg in sequence are

(Mg + Cy), (G + Ye), (Mg + Cy), (G + Ye)

The Y signal is formed from these signals as follows:

$$Y = \{(G + Ye) + (Mg + Cy)\} \times 1/2$$
$$= 1/2\ \{2B + 3G + 2R\}$$

This is balanced since it is formed in the same way as for line A1.
In a like manner, the chroma (color difference) signal is approximated as follows:

$$-(B - Y) = \{(G + Ye) - (Mg + Cy)\}$$
$$= -\{2B - G\}$$

In other words, the chroma signal can be retrieved according to the sequence of lines from R – Y and – (B – Y) in alternation. This is also true for the B field.

Definition of Standard Imaging Conditions

◆ Standard imaging condition I:
Use a pattern box (luminance: 706cd/m^2, color temperature of 3200K halogen source) as a subject. (Pattern for evaluation is not applicable.) Use a testing standard lens with CM500S (t = 1.0mm) as an IR cut filter and image at F5.6. The luminous intensity to the sensor receiving surface at this point is defined as the standard sensitivity testing luminous intensity.

◆ Standard imaging condition II:
Image a light source (color temperature of 3200K) with a uniformity of brightness within 2% at all angles. Use a testing standard lens with CM500S (t = 1.0mm) as an IR cut filter. The luminous intensity is adjusted to the value indicated in each testing item by the lens diaphragm.

◆ Standard imaging condition III:
Image a light source (color temperature of 3200K) with a uniformity of brightness within 2% at all angles. Use a testing standard lens (exit pupil distance –33mm) with CM500S (t = 1.0mm) as an IR cut filter. The luminous intensity is adjusted to the value indicated in each testing item by the lens diaphragm.

1. Sensitivity
Set to standard imaging condition I. After selecting the electronic shutter mode with a shutter speed of 1/250s, measure the Y signal (Ys) at the center of the screen and substitute the value into the following formula.

$$S = Y_S \times (250/50) \text{ [mV]}$$

2. Sensitivity ratio
Set to standard imaging condition II. Adjust the luminous intensity so that the average value of the Y signal output is 200mV, and then measure the Mg signal output (S_{Mg} [mV]) and G signal output (S_G [mV]), and Ye signal output (S_{Ye} [mV]) and Cy signal output (S_{Cy} [mV]) at the center of the screen with frame readout method. Substitute the values into the following formula.

$$R_{MgG} = S_{Mg}/S_G$$
$$R_{YeCy} = S_{Ye}/S_{Cy}$$

3. Saturation signal
Set to standard imaging condition II. After adjusting the luminous intensity to 10 times the intensity with average value of the Y signal output, 200mV, measure the minimum value of the Y signal.

4. Smear
Set to standard imaging condition II. With the lens diaphragm at F5.6 to F8, adjust the luminous intensity to 500 times the intensity with average value of the Y signal output, 200mV. When the readout clock is stopped and the charge drain is executed by the electronic shutter at the respective H blankings, measure the maximum value YSm [mV] of the Y signal output and substitute the value into the following formula.

$$Sm = 20 \times \log \{(YSm/200) \times (1/500) \times (1/10)\} \text{ [dB] (1/10V method conversion value)}$$

5. Video signal shading
Set to standard imaging condition III. With the lens diaphragm at F5.6 to F8, adjust the luminous intensity so that the average value of the Y signal output is 200mV. Then measure the maximum (Ymax [mV]) and minimum (Ymin [mV]) values of the Y signal and substitute the values into the following formula.

$$SHy = (Ymax - Ymin)/200 \times 100 \text{ [\%]}$$

6. Uniformity between video signal channels
   Set to standard imaging condition II. Adjust the luminous intensity so that the average value of the Y signal output is 200mV, and then measure the maximum (Crmax, Cbmax [mV]) and minimum (Crmin, Cbmin [mV]) values of the R – Y and B – Y channels of the chroma signal and substitute the values into the following formula.

   $\Delta Sr = |(Crmax - Crmin)/200| \times 100$ [%]
   $\Delta Sb = |(Cbmax - Cbmin)/200| \times 100$ [%]

7. Dark signal
   Measure the average value of the Y signal output (Ydt [mV]) with the device ambient temperature 60℃ and the device in the light-obstructed state, using the horizontal idle transfer level as a reference.

8. Dark signal shading
   After measuring 7, measure the maximum (Ydmax [mV]) and minimum (Ydmin [mV]) values of the Y signal output and substitute the values into the following formula.

   $\Delta Ydt = Ydmax - Ydmin$ [mV]

9. Flicker
   (1) Fy
   Set to standard imaging condition II. Adjust the luminous intensity so that the average value of the Y signal output is 200mV, and then measure the difference in the signal level between fields (ΔYf [mV]). Then substitute the value into the following formula.

   $Fy = (\Delta Yf/200) \times 100$ [%]

   (2) Fcr, Fcb
   Set to standard imaging condition II. Adjust the luminous intensity so that the average value of the Y signal output is 200mV, insert an R or B filter, and then measure both the difference in the signal level between fields of the chroma signal (ΔCr, ΔCb) as well as the average value of the chroma signal output (CAr, CAb). Substitute the values into the following formula.

   $Fci = (\Delta Ci/CAi) \times 100$ [%] (i = r, b)

10. Line crawls
    Set to standard imaging condition II. Adjust the luminous intensity so that the average value of the Y signal output is 200mV, and then insert a white subject and R, G, and B filters and measure the difference between Y signal lines for the same field (ΔYlw, ΔYlr, ΔYlg, ΔYlb [mV]). Substitute the values into the following formula.

    $Lci = (\Delta Yli/200) \times 100$ [%] (i = w, r, g, b)

11. Lag

Adjust the Y signal output value generated by strobe light to 200mV. After setting the strobe light so that it strobes with the following timing, measure the residual signal (Ylag). Substitute the value into the following formula.

$$\text{Lag} = (\text{Ylag}/200) \times 100\ [\%]$$

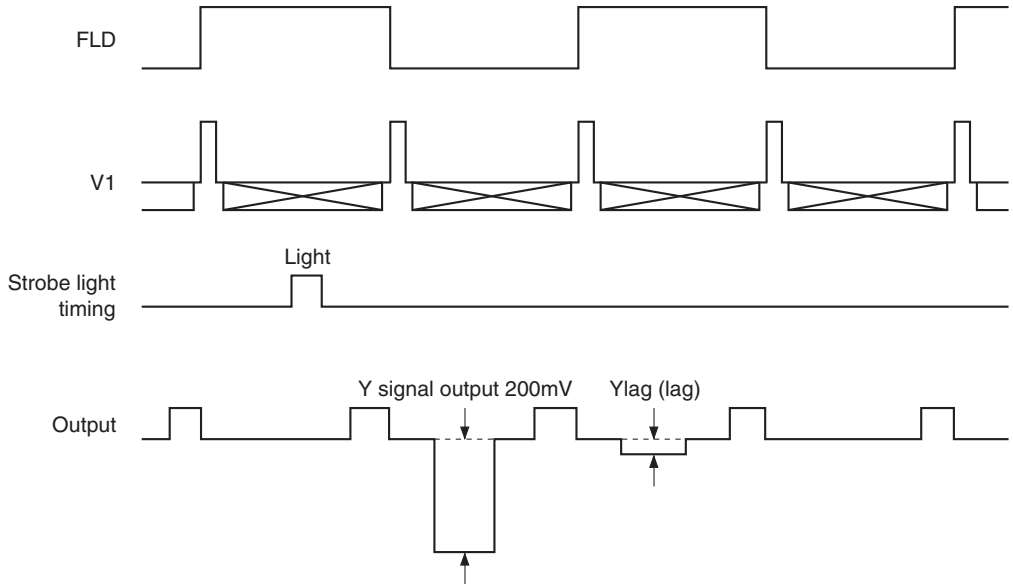

Drive Circuit

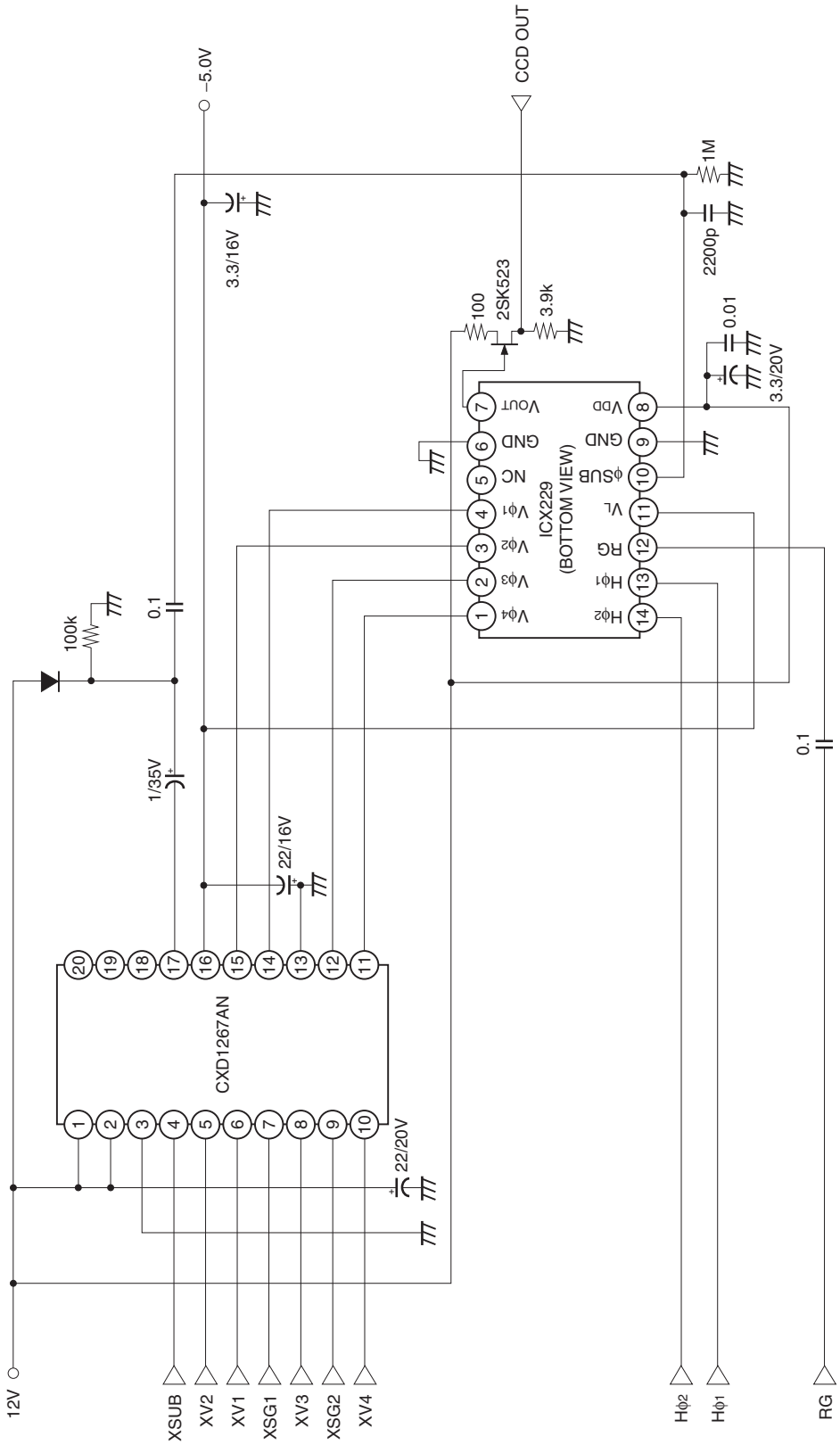

Spectral Sensitivity Characteristics

(excludes both lens characteristics and light source characteristics)

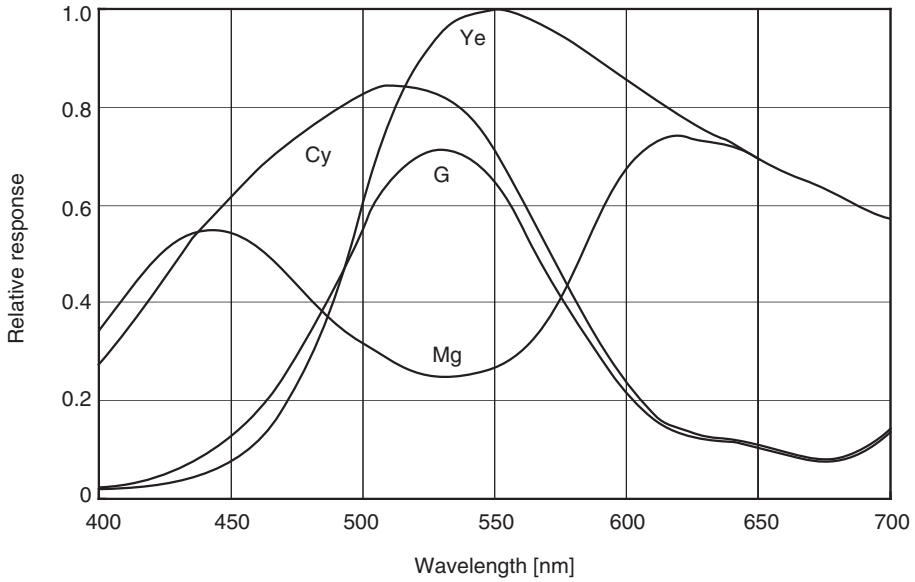

Sensor Readout Clock Timing Chart

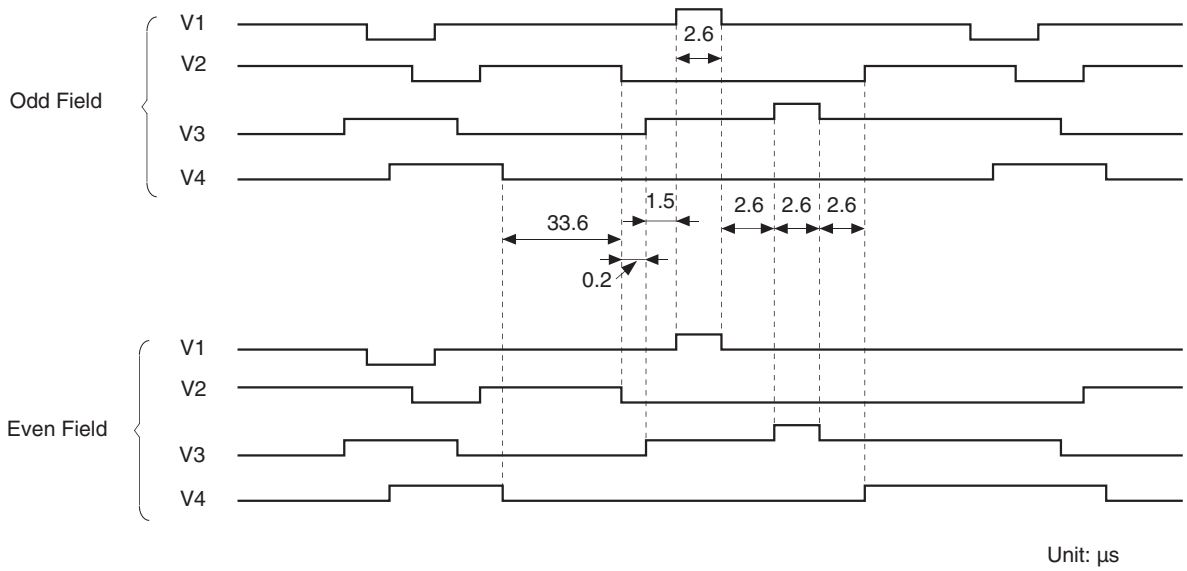

Drive Timing Chart

Vertical Sync

Horizontal Sync

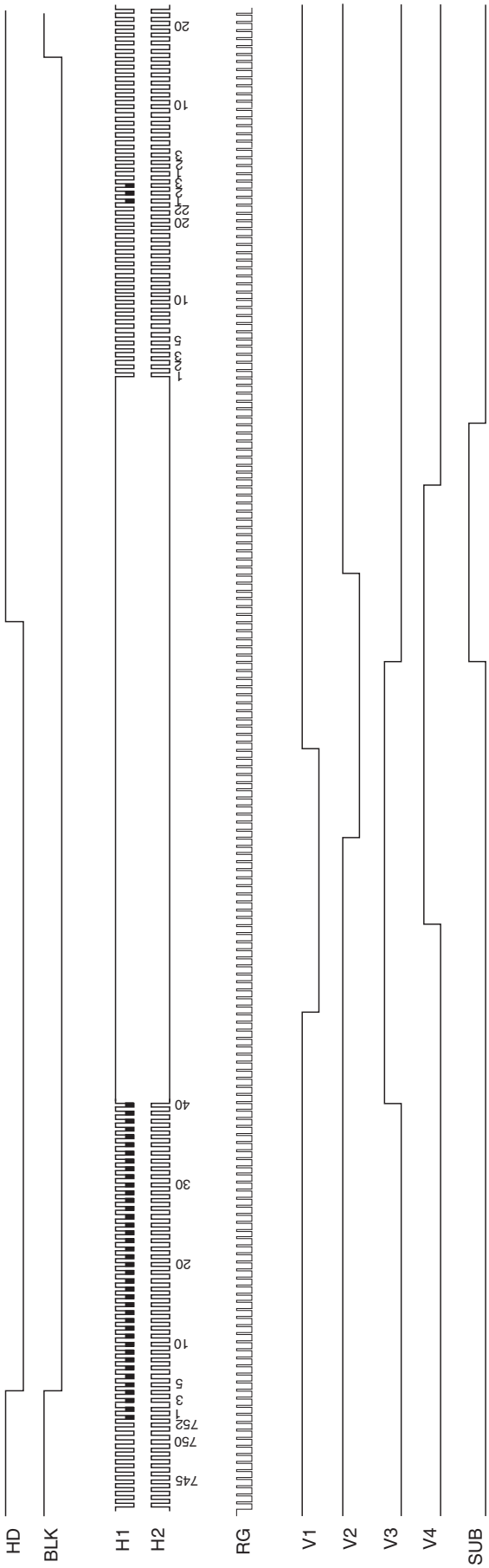

Notes On Handling

1. Static charge prevention
   CCD image sensors are easily damaged by static discharge. Before handling be sure to take the following protective measures.
   (1) Either handle bare handed or use non-chargeable gloves, clothes or material.
   Also use conductive shoes.
   (2) When handling directly use an earth band.
   (3) Install a conductive mat on the floor or working table to prevent the generation of static electricity.
   (4) Ionized air is recommended for discharge when handling CCD image sensor.
   (5) For the shipment of mounted substrates, use boxes treated for the prevention of static charges.

2. Soldering
   (1) Make sure the package temperature does not exceed 80℃.
   (2) Solder dipping in a mounting furnace causes damage to the glass and other defects. Use a ground 30W soldering iron and solder each pin in less than 2 seconds. For repairs and remount, cool sufficiently.
   (3) To dismount an image sensor, do not use a solder suction equipment. When using an electric desoldering tool, use a thermal controller of the zero cross On/Off type and connect it to ground.

3. Dust and dirt protection
   Image sensors are packed and delivered by taking care of protecting its glass plates from harmful dust and dirt. Clean glass plates with the following operation as required, and use them.
   (1) Perform all assembly operations in a clean room (class 1000 or less).
   (2) Do not either touch glass plates by hand or have any object come in contact with glass surfaces. Should dirt stick to a glass surface, blow it off with an air blower. (For dirt stuck through static electricity ionized air is recommended.)
   (3) Clean with a cotton bud and ethyl alcohol if the grease stained. Be careful not to scratch the glass.
   (4) Keep in a case to protect from dust and dirt. To prevent dew condensation, preheat or precool when moving to a room with great temperature differences.
   (5) When a protective tape is applied before shipping, just before use remove the tape applied for electrostatic protection. Do not reuse the tape.

4. Installing (attaching)
   (1) Remain within the following limits when applying a static load to the package. Do not apply any load more than 0.7mm inside the outer perimeter of the glass portion, and do not apply any load or impact to limited portions. (This may cause cracks in the package.)

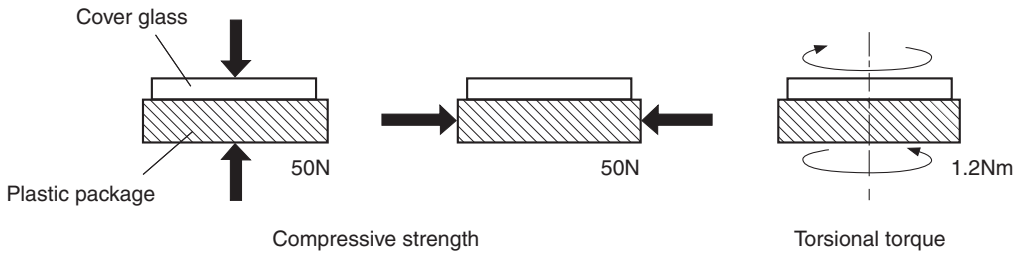

   (2) If a load is applied to the entire surface by a hard component, bending stress may be generated and the package may fracture, etc., depending on the flatness of the bottom of the package. Therefore, for installation, use either an elastic load, such as a spring plate, or an adhesive.
   (3) The adhesive may cause the marking on the rear surface to disappear, especially in case the regulated voltage value is indicated on the rear surface. Therefore, the adhesive should not be applied to this area, and indicated values should be transferred to the other locations as a precaution.

(4) The notch of the package is used for directional index, and that can not be used for reference of fixing. In addition, the cover glass and seal resin may overlap with the notch of the package.

(5) If the lead bend repeatedly and the metal, etc., clash or rub against the package, the dust may be generated by the fragments of resin.

(6) Acrylate anaerobic adhesives are generally used to attach CCD image sensors. In addition, cyanoacrylate instantaneous adhesives are sometimes used jointly with acrylate anaerobic adhesives. (reference)

5. Others

(1) Do not expose to strong light (sun rays) for long periods, color filters will be discolored. When high luminance objects are imaged with the exposure level control by electronic-iris, the luminance of the image-plane may become excessive and discolor of the color filter will possibly be accelerated. In such a case, it is advisable that taking-lens with the automatic-iris and closing of the shutter during the power-off mode should be properly arranged. For continuous using under cruel condition exceeding the normal using condition, consult our company.

(2) Exposure to high temperature or humidity will affect the characteristics. Accordingly avoid storage or usage in such conditions.

(3) The brown stain may be seen on the bottom or side of the package. But this does not affect the CCD characteristics.

(4) This package has 2 kinds of internal structure. However, their package outline, optical size, and strength are the same.

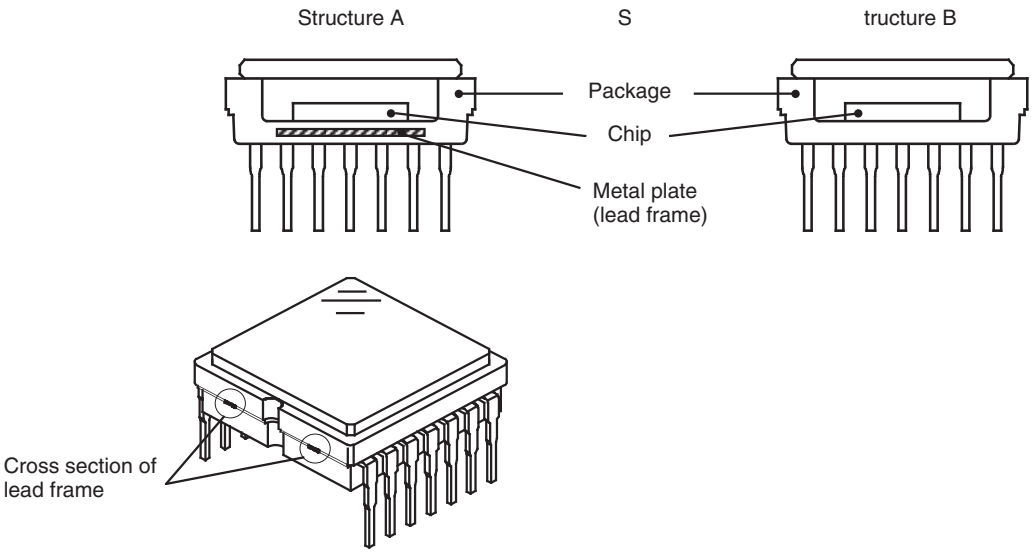

The cross section of lead frame can be seen on the side of the package for structure A.

Package Outline

(Unit: mm)

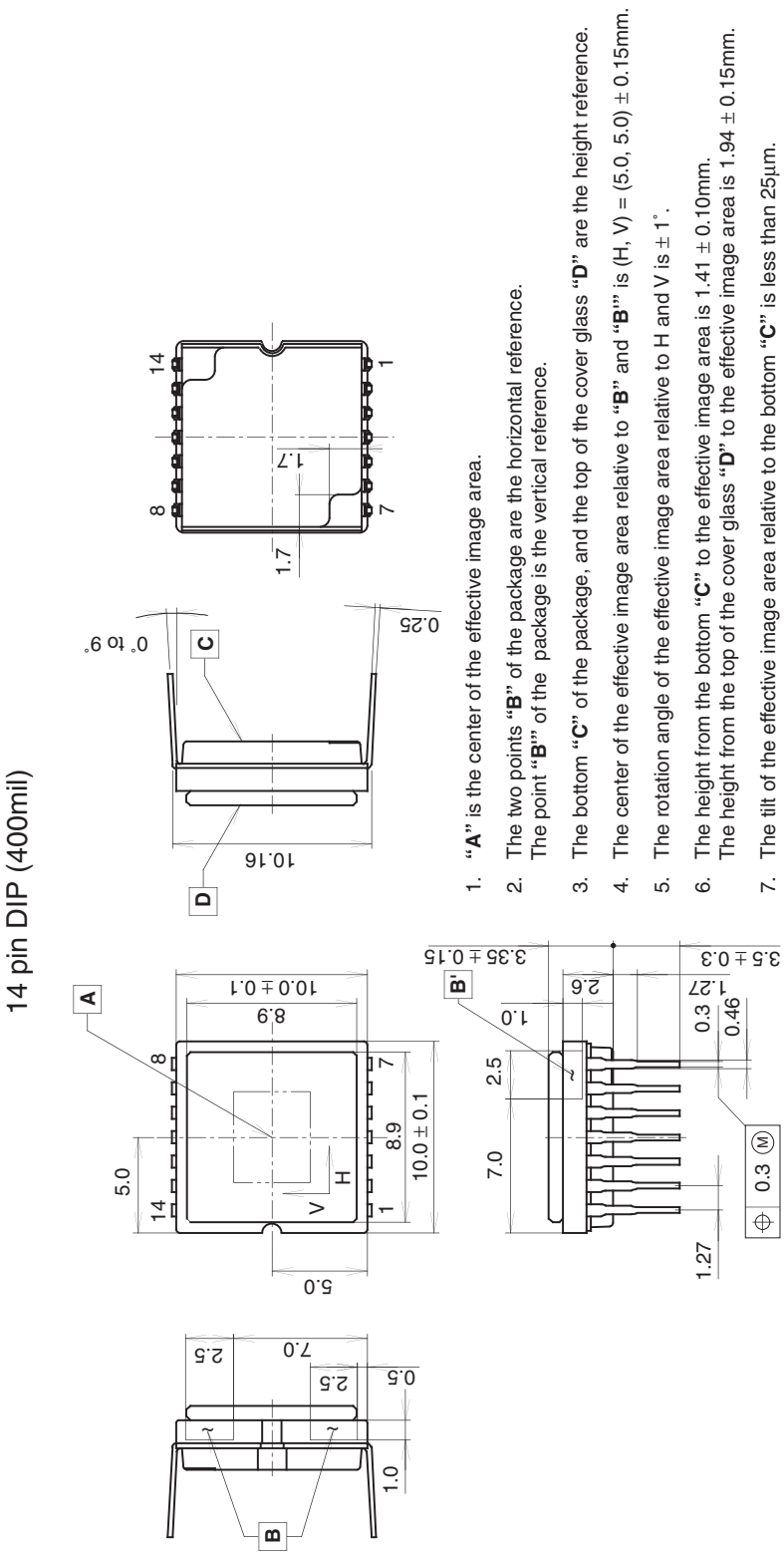

1. **"A"** is the center of the effective image area.
2. The two points **"B"** of the package are the horizontal reference.
   The point **"B'"** of the package is the vertical reference.
3. The bottom **"C"** of the package, and the top of the cover glass **"D"** are the height reference.
4. The center of the effective image area relative to **"B"** and **"B'"** is (H, V) = (5.0, 5.0) ± 0.15mm.
5. The rotation angle of the effective image area relative to H and V is ± 1°.
6. The height from the bottom **"C"** to the effective image area is 1.41 ± 0.10mm.
   The height from the top of the cover glass **"D"** to the effective image area is 1.94 ± 0.15mm.
7. The tilt of the effective image area relative to the bottom **"C"** is less than 25µm.
   The tilt of the effective image area relative to the top **"D"** of the cover glass is less than 25µm.
8. The thickness of the cover glass is 0.75mm, and the refractive index is 1.5.
9. The notch of the package is used only for directional index, that must not be used for reference of fixing.
10. Cover glass defect
    Edge part
    Length : no matter, Width : less than 0.5mm, Depth : less than the thickness of the glass.
    Corner part
    Length : less than 1.5mm, Depth : less than the thickness of the glass.

PACKAGE STRUCTURE

PACKAGE MATERIAL	Plastic
LEAD TREATMENT	GOLD PLATING
LEAD MATERIAL	42 ALLOY
PACKAGE MASS	0.60g
DRAWING NUMBER	AS-D3-02(E)